SPECIFICATION FOR APPROVAL SHEET

CUSTOMER : CS263
PART NO. :
DESCRIPTION : 3010H 5V 9000RPM
PART NO. : HDH0305HG-F
DEL. DATE : 2026.02.24

UITRAR SIGNATURE

APPROVED BY	CHECKED BY	PREPARED BY
xiaochang Zhou	Fuqiang Zeng	Xiaoling Tang

CUSTOMER SIGNATURE

TEST RESULT:		
APPROVED BY	CHECKED BY	PREPARED BY

1.MODEL : HDH0305HG-F

2.SAMPLES ATTACHED :

3.SPECTIFICATIONS :

****

ITEM		SPECIFICATION/CONDITION
DIMENSIONS	:	30*30*10mm
BEARING TYPE	:	液压轴承（HYDRAULIC BEARING）
RATED VOLTAGE	:	DC 5V
OPERATING VOLTAGE	:	DC 4.5V-5.5V
START-UP VOLTAGE	:	3.7V ON/OFF
INPUT CURRENT	:	0.25A (MAX: 0.30A)
INPUT POWER	:	1.25W (MAX: 1.5W)
RATED SPEED	:	9000±10%RPM
MAX.AIR FLOW	:	3.11 CFM (REF.) AT ZERO STATIC PRESSURE .
MAX.AIR PRESUURE	:	3.9 mmH2O (REF.) AT ZERO AIRFLOW .
ACOUSTICAL NOISE AVG.	:	27.2 dB-A（REF.）
PROFECFION TYPE	:	
NET WEIGHT	:	9 Gram.
POLARITY PROTECTION	:	YES
LOCKED ROTOR PROTECTION	:	YES
SIGNAL OUTPUT	:	FG
SPEED CONTROL	:	NO
AUTO RESTART	:	YES
HOUSING	:	WITHOUT CONNECTOR
CONNECTION LEAD TYPE	:	UL1061 28# AWG L=300mm branching wire
BLACK WIRE	:	NEGATIVE（ - ）
RED WIRE	:	POSITIVE(+)
YELLOW WIRE	:	FG OUTPUT

ROTATION DIRECTION : THE BLADE IS COUNTER CLOCKWISE VIEWING FROM THE BLADE

	APPROVE	CHECKED BY	PREPARED
Ultrar	xiaochang Zhou	Fuqiang Zeng	Xiaoling Tang

4.SCOPE:

THIS DOCUMENTATION DEFINES THE THERMAL、MECHANICAL& ELECTRICAL CHARACTERISTICS

1.0.SCOPE

（THIS DOCUMENTATION DEFINES THE MECHANICAL&ELECTRICAL CHARACTERISTICS OF DC BRUSHLESS FANS）

2.0.MATERAL

2.0.1.DIMENSIONS	：	SEE DIMENSIONS DRAWINGA
2.0.2.FRAME	：	BLACK PBT
2.0.3.IMPELLER	：	BLACK PBT
2.0.4 .BEARING SYSTEM	：	液压轴承（HYDRAULIC BEARING）
2.0.5.LABLE	：	Φ15-HDH0305HG-F-DC 5V-0.30A

3.0.DIMENSIONS ＆ CONSTRUCCTION

（ALL DIMENSIONS.DIRECTION OF ROTATION AND AIR FLOW WERE SPECIFIED AS PER DRAWING ATTACHED

4.0 .CHARACTERISTICE ＆ DEFINITION

4.0.1 (ALL RATED CHARACTERISTICS WERE SPECIFIED AS PER DATA SHEET ENCLOSED)

4.0.2（RATED CURRENT:RATED CURRENT SHALL BE MEASURED AFTER 3 MINUTES OF CONTINUOUS ROTATION AT RATED VOLTAGE）

4.0.3（RATED SPEED: RATED SPEED SHALL BE MEASURED AFTER 3 MINUTES OF CONTINUOUS ROTATION AT RATED VOLTAGE）。

4.0.4（START VOLTAGE: THE VOLTAGE WHICH IS ABLE TO START THE FAN TO OPERATE BY SUDDENLY SWITCHING “ON”）。

4.0.5（INPUT POWER :INPUT POWER SHALL BE MEASURED AFTER 3 MINUTES OF CONTINUOUS ROTATION AT RATED VOLTAGE）

4.0.6（THE FAN CAN BELOCKED LOCKED ROTOR CURRENT: LOCKED CURRENT SHALL BE MEASURED WITHIN ONEMINUTE OF ROTOR LOCKED AFTER 3 MINUTES OF CONTINUOUS ROTATION AT RATED VOLTAGE IN CLEAN AIR ）

4.0.7 （AIR FLOW＆ STATIC PRESSURE: THE AIR FLOW DATA AND STATIC PRESSURES SHOULD BE DETERMINED IN ACCORDANCE WITH AMCA STANDARD OR DIN24163 SPECIFICATION IN A DOUBLE CHAMBER TESTING WITH INTAKE SIDE MEASUREMENT）

4.0.8 （NOISE LEVEL:THE MEASUREMENT OF NOISE LEVEL IS CARRIED OUT WITH REFERENCE TO DIN45635.IN AN ANECHOIC CHAMBER WITH THE MICROPHONE POSITIONED 1 METER FROM THE AIR INTAKE.TESTING FAN SHALL BE HUNG IN CLEAN AIR)

4.0.9 ROTATION DIRECTION

THE BLADE IS COUNTER CLOCKWISE VIEWING FROM THE BLADE

THE SAME DIRECTION ALSO INDICATED BY ANARROW MARK ON ONE SIDE OF THE FRAME）

5.0 PROTECTION

5.0.1（ALL FANS HAVE INTEGRATED PROTECTION AGAINST LOCKED ROTOR CONDITION SO THAT THERE WILL BE NO DAMGE TO WINDING OR ANY ELECTRONIC COMPONMENT.RESTARTING IS AUTOMATIC AS SOON AS ANY CONSTRAINT COMPONENT TO ROTATION HAS BEEN RELEASED

5.0.2（AS FAN PLACED AT DEAD ANGLE POSITIION, AND THE SWITCH OF FAN WAS CHANGED FROM OFF TO ON. RESTARTING WAS AUTOMATIC NORMAL AS SOON AS AND PROVED THAT THIS FAN IS GOOD FAN）

6.0INSULATION RESISTANCE
（NOT LESS THAN 10M OHM BETWEEN HOUSING AND POSITIVE END OF LEAD WIRE （RED）AT 500V DC ）

7.0 DIELECTRIC STRENGTH
（NO DAMAGE SHOULD AT 500V AC FOR 60 SEC. MEASURED WITH 5mA TRIP CURRENT BETWEEN HOUSING AND POSITIVE END OF LEAD WIRE）

8.0LIFE EXPECTANCY
(THE CONTINUOUS DUTY LIFE AT GIVEN TEMPERATURE,AFTER WHICH TESTING UNITS SHALL STILL BE RUNNING）

BEARING SYSTEM	TEST TEMPERATURE	HUMIDITY	TEST TIME(H)
SLEEVE BEARING	25℃	15—65%	30000
HYDRAULIC BEARING	40℃	15—65%	40000
ONE BALL ONE SLEEVE	40℃	15—65%	40000
TWO BALL BEARING	40℃	15—65%	70000

9.0 OPERATING TEMPERATURE
-10℃ to +70℃ AT NORMAL HUMITITY。

10.0 STORAGE TEMPERATURE
（ALL FUNCTION SHALL BE NORMAL AFTER 500 HOURS STORAGE AT -40℃ to +75℃ AT NORMAL HUMIDITY WITH A 24 HOURS RECOVERY PERIOD AT ROOM TEMPERATURE)

11.0HUMIDITY
（AFTER 96 HOURS 95%RH 40＋/-2℃ PER MIL-STD-202F,METHOD 103B HUMLDITY TEST.THE MEASURED DATA ON INSULATION RESISTANCE AND DIELECTRIC STRENGTH SHALL MEET THE SPECIFICATION.8.0 REMARKS）

12.0（MATERIAL AND CONSTRUCTION ARE SUBJECT TO CHANGE WITHOUT ADVANCE THE CHANGES SHOULD BE WITHIN SPECIFICATION）

13.0（ALL FANS SHALL MEET THE QUALITY INSPECTION UNDER SAMPLING PLAN MIL-STD-105E AS FOLLOW）

CRITICAL 0.25
MAJOR 1.0
MINOR 2.5

5.PRODUCT DRAWING:

DIMENSION：

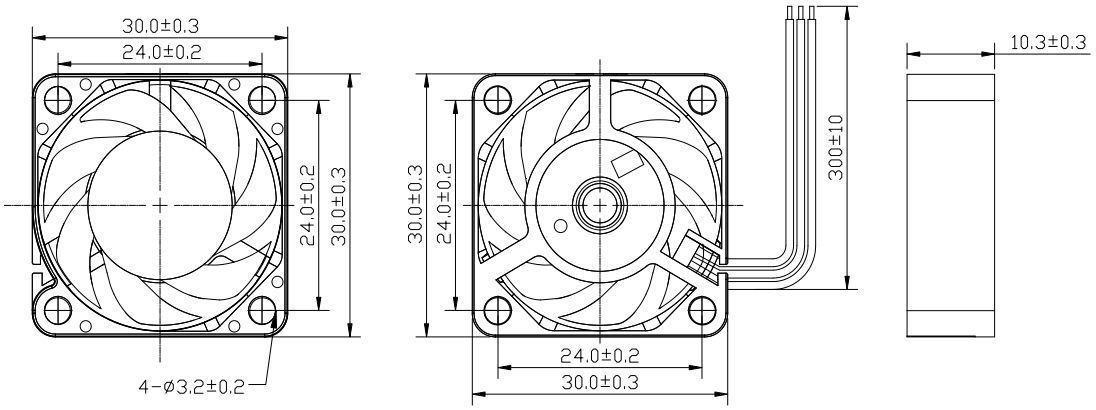

NOTE:

1.LEAD WIRE	:	UL1061 28# AWG L=300mm branching wire
BLACK WIRE	:	NEGATIVE（ - ）
RED WIRE	:	POSITIVE（+ ）
YELLOW WIRE	:	FG OUTPUT
2.CONNECTOR	:	WITHOUT CONNECTOR
3.IMPELLER	:	7 BLADES
4 .(ADD A CAPACITOR WHICH IS OVER 4.7μF, 100V TO FILTER RIPPLE CURRENT AT POWER POLARITIES IN PARALLEL ON TESTING FIXTURE.)		

UNLESS OTHERWISE SPECIFIED					mm 0 20 THIRD ANGLE PROJECTION		DRAWING NAME		CUSTOMER NAME		
									CS263		
LENGTH							PART NO.		CUSTOMER PART NO.		
X.XX	0.05	0.1	0.2	0.3			HDH0305HG-F				
X.X	0.1	0.2	0.3	0.4	METHOD	COLOR	APVD.	DATE	Ultrar		
X	0.15	0.3	0.4	0.5			xiaochang Zhou	2026.02.24			
< 50	0.2	0.4	0.5	0.7	MATERIAL:		CHK. BY	DATE			
> 50--100	0.3	0.5	0.7	0.9			Fuqiang Zeng	2026.02.24	DRAWING NO.		
ABOVE 100	0.4	0.6	0.8	1.1	EXTRUSION NO.:		DRN. BY	DATE	HDH0305HG-F		A0
ANGLE±0.5°							Xiaoling Tang	2026.02.24	SCALE 1：1	SHEET	1 of 1

Document control,Prohibit copy

6.ROTATION DETECT (FG) SIGNAL）

6.1. OUTPUT CIRCUIT-OPEN COLLECTOR MODE）

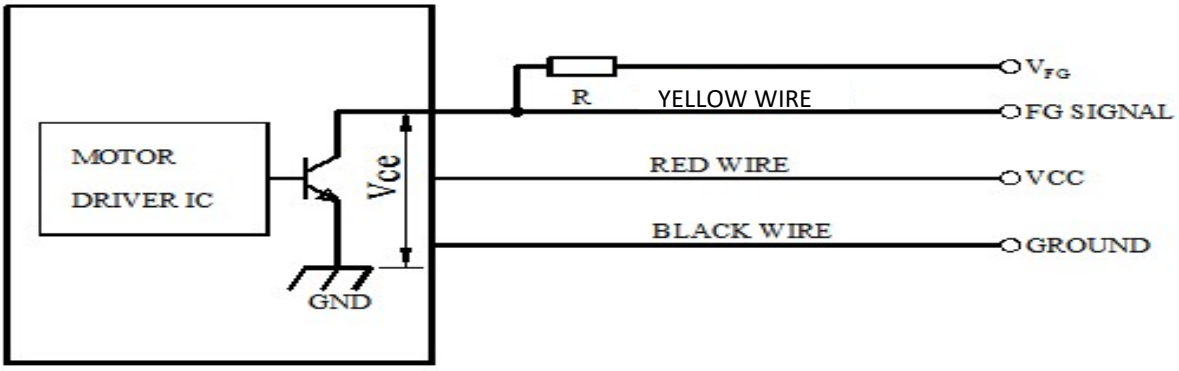

（CAUTION:THE FG SIGNAL LEAD WIRE MUST BE KEPT AWAY FROM"+"LEAD WIRE&"-" LEAD WIRE.）

6.2. （SPECIFICATION）

Vce(sat)=0.5V MAX　　VFG=5.5V

Ic=5mA MAX.　　R≥VFG/Ic

6.3. （FREQUENCY GENERATOR WAVEFORM）

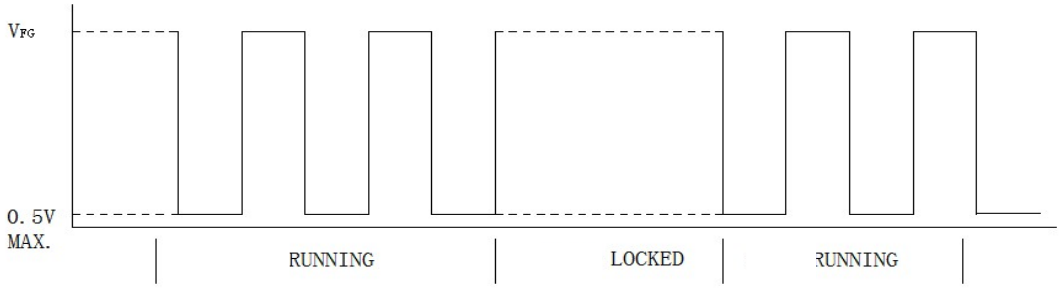

4（FAN RUNNING FOR 4 POLES ）

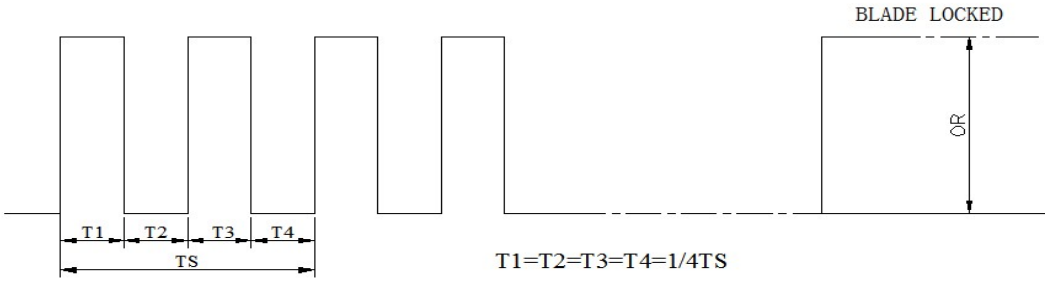

N=R.P.M

TS=60/N(SEC)

*(VOLTAGE LEVEL AFTER BLADE LOCKED)

*（4 POLES）

FAN INSTALLATION INSTRUCTIONS

1. In case of using bolt-nut fasteners，the flatness of chassis mating surfaces should be kept below 0.lmm.
2. How to fasten the fames of different types:

   The torque should not exceed 4.5 kgf-cm [figure(a)]

   B. Rib type : Screw the bolt through the rib.

   The torque should not exceed 7.5 kgf-cm [figure(b)]
3. In case of using self-tapping screws，appropriate screws according to JIS B 1122 Type 2 should be used. The dimensional details of the self-tapping screws recommended are shown in Table(a). Each fastener hole should only be tightened once or slippage may occur. In addition，the torque to be applied to the self-tapping screws must not exceed the values stated in Table(a).
4. The countersunk part of fastener head should not interfere with the frame or there would be a risk of breakage [figure(e)]. Fastener head with flat inner surface，i.e. no countersunk，is recommended.

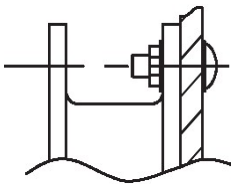

(a)

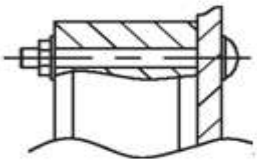

(b)

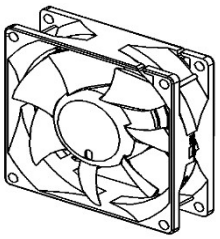

（c）

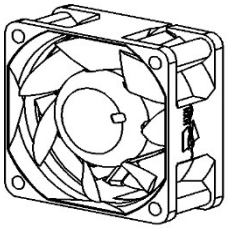

（d)

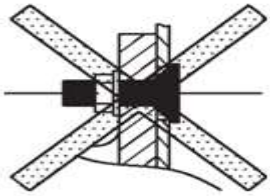

(e)

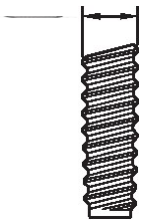

(f)

MDUNTII. HDLE DIAMETER	SCREW SPEC.	MAJDR DIAMETER [Fig.(t)]		**RECOMMENDED MAI.TORQUE kgf-cm)	
		MAXIMUM	MINIMUM	FLANGE TYPE	RIB TYPE
Ø3.5	M4 x1.41	4.0	3.85	4.5	7.5
Ø4.4	M5 x1.59	5.0	4.85	5.5	7.5

Non JIS B1122 spec

A lower torque than the recommended value should be used if slippage is observed.

IMPORTANT NOTES &GENERAL INSTRUCTIONS

1. Customer shall confirm the matching and reliability of fan on actual set or unit application. This include confirmation on set or unit life,electrical noise,mechanical noise, Vibration static electricity,electric power noise,drift,electric resonance between motor and control circuit ,mechanical resonance between motor and chassis, irregular movement of set due to motor noise ,irregular movement of set in strong electromagnetic field ,damaged by lightning surge earthing method etc
2. Any item which is needed to add into specification shall be determined on customer's prior written request. If no information given , fan will be delivered based on our standard judgment.
3. When any trouble occurs, both parties shall discuss on this specification to solve the matters. In this case, our guarantee is only limited to fans
4. Any revisions on the specification shall be done based on mutual discussion and agreement.

☆ HOW TO HANDLE FAN PROPERLY?

1. Hold the fan by frame side.
   Do not hold lead wires to support the fan
2. No touching or pressing on the impeller hub.
   Avoid crushing the frame side.
3. Do not drop on the ground.
   Do not pound on the frame side.
4. Connect leads priperly and applty voltage according to specification.

Description:

1. If the products are applied outside the parameters set in the specification,FAN is not responsible for the performance of the products.
2. Should customers request deviation from specification，they must frrst submit written request to FAN for approval.
3. FAN will not guarantee that the products will be safe to use ifthere are problems caused by powder，water，and corrosive fluids.
4. Please double check on the correct polarity before connecting the fan to the power source
5. Fans must not be stored in a high humidity environment.They should be stored according to the specified storage temperature limits. Fans must be tested again for performance before shipment if the fans are stored for more than 6 months.
6. Incorrect setting up offans will very likely lead to excess vibration and acoustic noise.
7. During fan testing，we must take precautions against personal injury . Suitable fan guards must be fitted to the fans if needed.
8. When using multiple fans in parallel，please make sure to connect capacitor at least 4.7uF to avoid any unstable power
9. Unless stated in specification，all fan performance tests are to be carried out at relative temperature and humidity conditions at 25℃，65%.